ELSEVIER

Solid State Nuclear Magnetic Resonance 3 (1994) 171–175

SOLID STATE
Nuclear Magnetic
Resonance

Short communication

Aluminum to oxygen cross-polarization in α-Al_2O_3 (corundum)

Jürgen Haase, Eric Oldfield *

Department of Chemistry, University of Illinois at Urbana-Champaign, 505 South Mathews Avenue, Urbana, IL 61801, USA

(Received 8 November 1993; accepted 23 December 1993)

Abstract

Experimental results concerning the cross-polarization of two quadrupolar, $I = 5/2$ nuclei are presented. It is shown in particular that ^{27}Al spins in α-Al_2O_3 (corundum) can be spin-locked, and magnetization transferred to the ^{17}O spin system. Cross-polarization between pairs of quadrupolar nuclei can cause considerable signal-to-noise ratio gains over conventional one- (or two-) pulse excitation and should be of use in investigating a number of inorganic solids.

Key words: Quadrupolar nuclei; Oxygen-17; Aluminum-27; Cross-polarization

1. Introduction

Cross-polarization (CP) techniques have been widely employed in the investigation of spin-1/2 I–S interactions for a number of years [1,2] and, more recently, examples of spin-1/2 to quadrupolar nucleus CP (*e.g.* $^1H \rightarrow {}^{17}O$, ref. 3; $^{31}P \rightarrow {}^{27}Al$, ref. 4) as well as quadrupolar nucleus to spin-1/2 CP (ref. 4, see also references in ref. 5) have been reported. However, to date, there have been no examples of quadrupole–quadrupole CP experiments. Since quadrupolar nuclei are present in many inorganic solids, we have investigated the feasibility of quadrupolar nucleus to quadrupolar nucleus (central transition to central transition) CP in a prototypical inorganic solid, α-Al_2O_3 powder. Our results show that large signal-to-noise ratio gains can be achieved, although for large quadrupole coupling constants lineshape distortions due to off-resonance/mismatch conditions can be expected.

2. Experimental

^{17}O and ^{27}Al nuclear magnetic resonance (NMR) measurements were made using a home-built spectrometer, which operates using an Oxford Instruments (Osney Mead, UK) 8.45-T superconducting solenoid magnet, a Nicolet (Madison, WI, USA) Model 1280 computer interfaced to a Nicolet Model 2090-IIIC (Explorer) transient recorder, and Amplifier Research (Souderton, PA, USA) radiofrequency (rf) amplifiers. The double resonance probe design used is described below.

The rf field strengths for the double-tuned probe were determined by using an aqueous $AlCl_3$ solution for ^{27}Al and tap water for ^{17}O; both

* Corresponding author.

SSDI 0926-2040(94)00004-V

materials also served as chemical shift references. For the single resonance experiments, we used either single-pulse excitation or a selective, solid $\pi/2$, π spin-echo sequence. CP was achieved by using a preparatory pulse in the ^{27}Al channel, having $\omega_{rf}\tau = \pi/2(I + 1/2)$, followed by a spin-lock pulse of variable length, with the same rf amplitude, ω_{rf}. The rf amplitude for ^{17}O was chosen to be 10 kHz, corresponding to an 8.3-μs solid $\pi/2$ pulse. The ^{27}Al rf amplitude was also adjusted to be 10 kHz. Then, the ^{27}Al rf amplitude was varied in 0.2-kHz increments in order to find the maximum ^{17}O signal enhancement (Hartman–Hahn match for the central transitions). For the detection of ^{17}O CP signals we used two different techniques. In the first method, data acquisition started immediately after the mix pulse for ^{17}O, while in the second method, a second solid (^{17}O) π pulse was applied 40 μs after the (^{17}O) mix pulse, with data acquisition commencing 40 μs after the π pulse. In both cases, the ^{17}O signals observed had the same amplitude (within experimental error) but, as anticipated, baseline artifacts were reduced when using the spin-echo method. Maximum CP enhancement was found for a ^{27}Al rf amplitude of 9.5–10.5 kHz (for rf amplitudes of 8.8 and 11.2 kHz, the intensity had decreased to *ca.* 80%). The central transition spin–lattice relaxation time of ^{27}Al in the corundum sample was *ca.* 2 s, while the ^{17}O central transition spin–lattice relaxation time was *ca.* 360 s. Most of the CP experiments used a 10-s recycle delay, and a further increase in this delay did not increase the ^{17}O signal intensity. The α-Al_2O_3 (corundum) powder was from Fisher Scientific (Fair Lawn, NJ, USA), while α-$Al_2{}^{17}O_3$ was prepared from [^{17}O]boehmite [3]. The ^{17}O abundance was ~ 10%.

2.1. Simple double resonance probe design

The CP probe used was based on the relatively simple circuit shown in Fig. 1. We found it desirable to use a computer program to aid in circuit design and while such programs are commercially available, they are generally expensive and complex. Our program was very straightforward and was written in Matlab (The MathWorks, Natick, MA, USA) using Kirchhoff's rules in complex notation. All variables were vectors (300 components), based on the range of frequencies of interest. Coils in the circuit were represented by ideal inductances, together with 0.01-Ohm series resistors, which avoided problems with singularities. The calculation of the probe circuit parameters was achieved as follows.

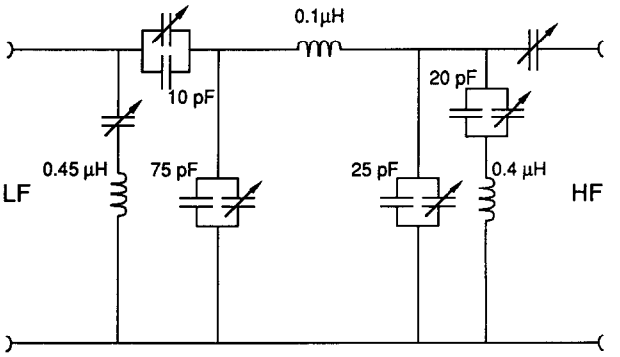

Fig. 1. Scheme showing the double resonance probe circuit design used. LF = low frequency (^{17}O); HF = high frequency (^{27}Al); variable capacitors were 1–12 pF.

First, the resonance frequencies of both traps were calculated. The inductance of a given trap coil was chosen to be high (~ 0.5 μH) in order to ensure high-quality factors for both traps so that, *e.g.*, the impedance of the low-frequency trap (*i.e.* ^{17}O) at the high frequency (*i.e.* ^{27}Al) was large compared to 50 Ω, which minimizes the influence of the traps upon tuning of the other circuit elements.

Second, tuning and matching at both inputs were performed using the program in an interactive manner. Since the traps were basically not varied, and we were bound by the inductance of the main coil, this computer optimization process was quite rapid (~ 30 min). In Fig. 2a and b we show the impedance and the rf amplitude (current in the main coil) calculated for our ^{17}O {^{27}Al} double resonance probe.

We then constructed an experimental probehead, using the component values obtained from the calculations. For two double resonance probes (Al {O} and Al {P}) we found that the range of the variable capacitors (1–12 pF) was enough to allow for tuning without further circuit changes,

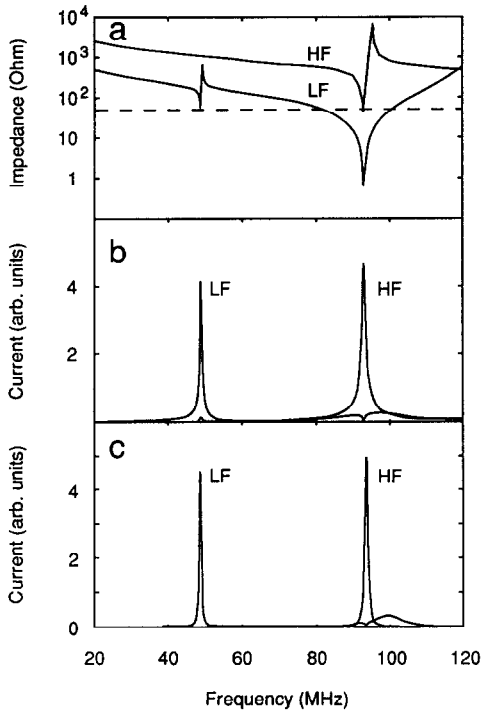

Fig. 2. Theoretical and experimental double resonance probe transfer functions. (a) Calculated frequency dependence of the impedance at the LF (low frequency, ^{17}O) and HF (high frequency, ^{27}Al) terminals. (b) Calculated frequency dependence of the current in the main coil for a voltage applied to the LF and HF terminals of the circuit, respectively. (c) Experimentally determined frequency dependence of the current in the main coil for a voltage applied to the LF and HF terminals of the circuit, respectively.

although with increasing resonance frequencies one expects increasing differences between calculated and actual parameters. With some experience, the total time for a new probe setup is *ca.* 1–2 h.

For comparison with the theoretical results, we show in Fig. 2c the frequency dependence of the rf amplitude, as determined with a spectrum analyzer, for the Al {O} CP probe. The experimental (and theoretical) quality factor was the same for both nuclei, $Q = 160 \pm 20$. Also, within experimental error, the rf amplitudes were the same for both resonances, as determined from nutation experiments on liquid samples, consistent with the theoretical design parameters.

3. Results and discussion

3.1. Aluminum spin-locking

For CP experiments on nuclei with strong quadrupolar coupling we first have to consider the spin-lock experiment. Vega [6] recently calculated the spin-lock behavior of a pure (first-order) quadrupolar coupling of a spin $I = 3/2$ nucleus and showed that effective spin-locking can be achieved after a selective, solid $\pi/2$ preparatory pulse. Since second-order quadrupolar effects may also be important, and analytical approaches become quite lengthy, we chose to employ numerical methods. The relevant Hamiltonians are reported elsewhere [7]. For a preparatory pulse, we used a pulse for which $\omega_{rf}\tau = \pi/2(I + 1/2)$, although this is not necessarily a solid $\pi/2$ pulse, since true selectivity is frequently hard to achieve. The second, spin-lock pulse (90° phase shifted with respect to the preparatory pulse), had the same rf amplitude, ω_{rf}. The powder average was performed by dividing a quadrant of the x–y plane into *ca.* 400 triangles, a procedure suggested by Alderman *et al.* [8] for lineshape calculations.

Our numerical results (not shown) verify the results for $I = 3/2$ obtained by Vega [6], and in addition we can make the following conclusions for our $I = 5/2$ spin systems. The preparatory y pulse creates an x phase coherence of the spin system, which for strong quadrupolar coupling is mainly due to the central transition, $m = \pm 1/2$. The second, x pulse, spin-locks only the central transition coherence (in the x direction) and may also create a weak nutation signal (in the y direction) due to spins remaining along the z axis after the first pulse. For truly selective excitation, the coherence of the central transition is completely spin-locked. For partly selective excitation (which often describes the experimental situation) the intensity after the first pulse is larger than for selective excitation, as follows from the nutation experiment. However, the second pulse spin-locks almost all of these spins. In the powder average, there is a small initial drop of this spin-lock signal intensity seen in the calculations, as found also in Vega's experiments [6]. In contrast to, *e.g.*, spin-

echo NMR [7], the pulse amplitude is not a critical factor for the spin-lock experiment. We also found second-order quadrupolar effects to be important only if the rf amplitude, ω_{rf}, is less than the second-order linewidth for the powder (the expected off-resonance effect due to the second-order frequency shift).

Based on the dipolar interactions in α-Al_2O_3 ($M_{2AlAl} = 2.4 \cdot 10^8$ s^{-2}; $M_{2OAl} = 1.5 \cdot 10^8$ s^{-2}) spin-locking of both nuclei should be possible. Experimental results for the ^{27}Al spin-lock intensity as a function of the rf amplitude are shown in Fig. 3. At short spin-lock times, the results can be explained by considering the central transitions as an effective spin-1/2. The local field [9] for the ^{27}Al spins is $(1/2\pi)\sqrt{M_{2AlAl}/3} \approx 1.4$ kHz (for the ^{17}O spins $(1/2\pi)\sqrt{M_{2OAl}} \approx 1.9$ kHz). For longer spin-lock times, however, it is seen from Fig. 3 that the spin-lock amplitude further decreases with a much smaller time constant (~ 10 ms), compared with the dipolar T_2 (of about 100 μs). We explain this behavior by the occurrence of multiple, energy-conserving spin-flip processes involving all Zeeman levels, which destroy the spin-lock amplitude. In fact, in additional spin-lock experiments (data not shown) we found that the amplitude levels off at approximately 80 ms at a relative intensity of *ca.* 65%, and remains constant up to the longest spin-lock time we have investigated (300 ms at $\nu_{rf} = 14$ kHz), which rules out spin–lattice relaxation effects. Since multiple spin-flips have to be energy-conserving, it may be possible to test this hypothesis further at lower magnetic field strengths, where the second-order quadrupole shift should reduce the effect.

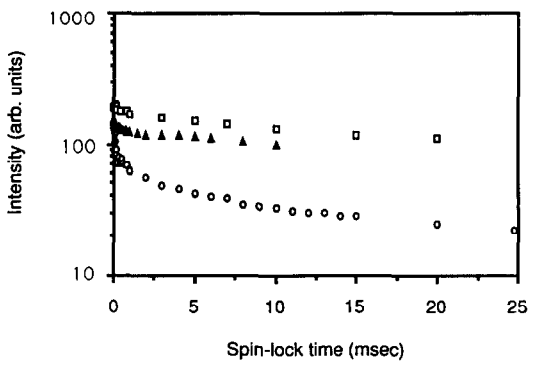

Fig. 3. 8.45-T ^{27}Al NMR spin-lock intensity as a function of the duration of the spin-lock pulse, for various rf amplitudes, for α-Al_2O_3. The spin-lock pulse was preceded by a 90° phase-shifted preparatory pulse of the same rf amplitude, with $\omega_{rf}\tau = \pi/2(I + 1/2)$. (□) $\omega_{rf}/2\pi = 14$ kHz; (▲) $\omega_{rf}/2\pi = 7.6$ kHz; (○) $\omega_{rf}/2\pi = 2.4$ kHz.

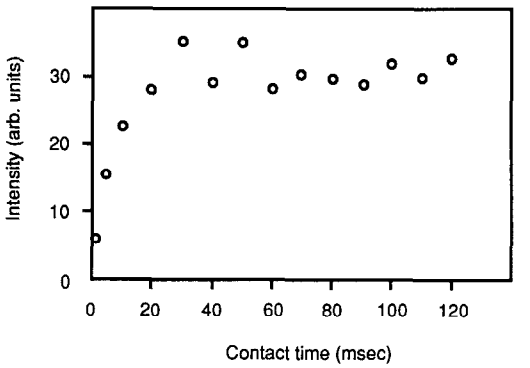

Fig. 4. 8.45-T ^{17}O CP NMR intensity as a function of the mix time for α-$Al_2{}^{17}O_3$ powder. The rf amplitude was *ca.* 10.0 kHz in both channels. For ^{27}Al, the mix pulse was preceded by a 90° phase-shifted 8.3-μs preparatory pulse. For ^{17}O, a 16.6-μs pulse was applied 40 μs after the mix pulse, with data acquisition commencing 40 μs after the second pulse; the recycle delay was 10 s.

3.2. Cross-polarization

We show in Fig. 4 the contact time dependence of the ^{17}O intensity for ^{27}Al to ^{17}O CP in α-$Al_2{}^{17}O_3$. The time constant for the magnetization transfer is *ca.* 8 ms. The effectiveness of such CP from ^{27}Al to ^{17}O nuclei in corundum is also shown in graphical form in Fig. 5. Fig. 5a shows an ^{17}O NMR spectrum obtained using single-contact CP with a spin-echo for detection, while Fig. 5b shows the corresponding spin-echo experiment with the same recycle delay (10 s) and number of scans as for the CP spectrum of Fig. 5a. An ^{17}O spin-echo experiment with a recycle delay of 2500 s ($T_1 \approx 360$ s) yielded a relative intensity of *ca.* 150% compared with the CP experiment (Fig. 5a). Since the ^{27}Al spin-locking showed a decrease in amplitude to *ca.* 65% at 50 ms (for $\nu_{rf} = 10$ kHz) and since similar behavior is expected for the ^{17}O spin-lock, an overall effectiveness for the CP process of *ca.* 30% seems reasonable. However, the large difference in spin–lattice relaxation rates of both nuclei leads to a very major

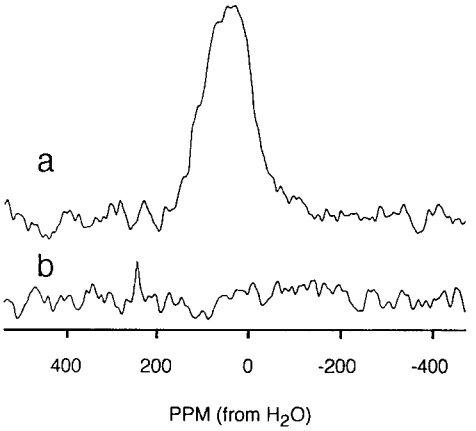

Fig. 5. Cross-polarization and spin-echo ^{17}O NMR spectra of α-Al_2O_3 at 8.45 T. (a) ^{17}O CP NMR spectrum, obtained at rf amplitudes of *ca.* 10 kHz in both channels. For ^{27}Al, the mix pulse was preceded by a 90° phase-shifted 8.3-μs preparatory pulse. For ^{17}O, a 16.6-μs pulse was applied 40 μs after the mix pulse with acquisition commencing 40 μs after the second pulse; duration of the mix pulse 50 ms; the recycle delay was 10 s. The ^{17}O spins were not ^{27}Al-decoupled during data acquisition. (b) ^{17}O spin-echo NMR spectrum at an rf amplitude of 10 kHz. The durations of the pulses were 8.3 and 16.6 μs. The delay between the pulses was 40 μs. Data acquisition started 40 μs after the second pulse; the recycle delay was 10 s.

(~ 200 ×) gain in spectral signal-to-noise ratio, as shown in Fig. 5a.

Although of a preliminary nature, the results we have shown above do show that quadrupolar nucleus–quadrupolar nucleus ($^{27}Al \rightarrow {}^{17}O$) CP experiments are feasible and that useful sensitivity gains can be achieved. A detailed analysis of the CP time constant, T_{IS}, in structural terms can be expected to be quite involved, since there is a measurable decrease in ^{27}Al spin-lock signal intensity on the time scale of T_{IS}, while beyond *ca.* 40–50 ms, both the ^{27}Al and ^{17}O intensities remain almost constant (out to at least 200 ms). In addition, for systems having larger (second-order) quadrupolar interactions, we find that there are pronounced lineshape distortions, since both I and S spins become largely off-resonant or mismatched. For example, in the zeolites Linde A and Linde Y we find severely distorted ^{17}O lineshapes in $^{27}Al \rightarrow {}^{17}O$ CP spectra [10], although in principle a lineshape analysis will enable a determination of e^2qQ/h and η to be made. The quadrupole–quadrupole CP experiment is thus, at present, most useful for investigating systems with moderate e^2qQ/h values, where rf fields greater than the $(1/2, -1/2)$ transition widths can be readily achieved.

Acknowledgements

We thank Carl Reiner for helpful comments on probe design and for determining the transfer functions in Fig. 2c, and Dr. Jay Shore for communicating his unpublished results on Linde A and Linde Y zeolites. This work was supported by the United States National Science Foundation Materials Research Laboratory Program (J.H.; Grant DMR 89-20538). J.H. was supported in part by the Deutsche Forschungsgemeinschaft.

References

[1] A. Pines, M.G. Gibby and J.S. Waugh, *J. Chem. Phys.*, 59 (1973) 569.
[2] M. Mehring, *Principles of High Resolution NMR in Solids*, Springer Verlag, New York, NY, 1983, Ch. 4.2, p. 143.
[3] T.H. Walter, G.L. Turner and E. Oldfield, *J. Magn. Reson.*, 76 (1988) 106.
[4] C.A. Fyfe, H. Grondey, K.T. Mueller, K.C. Wong-Moon and T. Markus, *J. Am. Chem. Soc.*, 114 (1992) 5876.
[5] D. Freude and J. Haase, in P. Diehl, E. Fluck, H. Günther, R. Kosfeld and J. Seelig (Eds.), *NMR Basic Principles and Progress*, Vol. 29, Springer-Verlag, Berlin, 1993, Ch. 6.2, p. 57.
[6] A.J. Vega, *J. Magn. Reson.*, 96 (1992) 50.
[7] J. Haase and E. Oldfield, *J. Magn. Reson., Ser. A*, 104 (1993) 1.
[8] D.W. Alderman, M.S. Solum and D.M. Grant, *J. Chem. Phys.*, 84 (1986) 3717.
[9] M. Goldman, *Spin Temperature and Nuclear Magnetic Resonance in Solids*, Clarendon Press, Oxford, 1970, Ch. 2, p. 30.
[10] J. Shore, J. Haase and E. Oldfield, unpublished results.