JOURNAL OF MAGNETIC RESONANCE 31, 327–335 (1978)

Sideways-Spinning 20-mm-Tube Probe for Widebore Superconducting Magnet Spectrometer Systems*

During the past five years there has been some interest in increasing NMR sample size to facilitate observation of single-carbon atom sites in a variety of macromolecules, such as proteins (*1*, *2*). In addition, there has been considerable interest in increasing spectral resolution and sensitivity by operating at high magnetic field strength. In general, signal-to-noise ratios increase with increasing magnetic field strength; however, it has been frequently noted that the gains are rather less than expected.

Working at high field under high-resolution conditions necessitates the use of a superconducting magnet. If a sample is to be spun about the z axis of the dc magnetic field H_0, then a Helmholtz or saddle-coil geometry has to be used. Such is the case on, for example, the Nicolet NT-150, Bruker WH-180, and HXS-360 spectrometers. Signal-to-noise comparison between low-field (say an XL-100) and high-field spectrometers has thus implicitly involved a comparison between the performance of a solenoid versus Helmholtz radiofrequency coil configuration. The general conclusion is that the gains expected on the basis of Abragam's treatment (*3*) are not seen.

In the solid-state area, where until recently it was not essential to use sample spinning, it has been noted empirically by those using superconducting magnets that optimum signal-to-noise ratios, optimum pulse widths, and optimum H_1 field homogeneities have been obtained when using solenoidal rf coil geometries; i.e., the radiofrequency coil lies horizontally in the NMR probe. More recently, Hoult and Richards (*4*) made detailed experimental and theoretical investigations of these observations, and they concluded that solenoid coils do indeed provide better signal-to-noise ratios and shorter pulse widths than Helmholtz configurations.

Clearly then, signal-to-noise and other advantages should accrue from the construction of a high-resolution spinning-sample probe utilizing a solenoid-geometry coil design.

In this paper, we describe the first example of a high-resolution NMR probe which combines a solenoid rf coil together with a *sideways-spinning* 20-mm sample tube. We show that our sideways-spinning tube (SST) probe and spectrometer provide signal-to-noise ratios similar to those obtained using commercial systems operating in the 3.5 to 4.2-tesla field range, which use *up to twice our sample volume.*

Our sideways-spinning-tube probe-spectrometer system permits rapid detection of single-carbon atom sites in proteins, may easily be shimmed to 0.3-Hz inhomogeneity broadening, has spinning sidebands of $\lesssim 1\%$, and operates with a sample of about 6.5 ml in a 20-mm tube. The main rationale for our development of the SST probe was in an

* This work was supported by the U.S. National Institutes of Health (Grant HL-19481), and in part by the U.S. National Science Foundation (Grant PCM 76-01491) and by the American Heart Association with funds contributed in part by the Illinois Heart Association (Grant 77-1004).

0022–2364/78/0312–0327$02.00/0

attempt to optimize determination of single nonprotonated carbon atom sites in proteins (where the most probable optimum field strength is about 3 to 4 tesla) when one is relatively sample-limited.

Our spectrometer is one of two recently constructed in our laboratory. The first system operates at a magnetic field strength of 5.4 tesla in a 3.0-in. bore and is principally for solid-state investigations of membrane structure. We will discuss this system elsewhere (E. Oldfield, M. Meadows, D. Rice, and R. Jacobs, to be published). The second system operates at a magnetic field strength of 3.52 tesla in a 4.0-in. bore and was designed principally for magic-angle cross-polarization experiments on membranes and for ^{13}C studies of proteins in solution. Since no prescriptions for the construction of a high-field high-resolution ^{13}C FT NMR spectrometer have to our knowledge appeared in the literature, we first outline the construction of our home-built spectrometer. The block diagram for the low-field system is shown in Fig. 1. We use a 3.52-tesla 4.0-in.-bore superconducting solenoid (Nalorac Inc., Beaumont, Tex., now Nalorac Division, Nicolet Instrument Corp., Stanwell Industrial Park, Concord, Calif.) which is equipped with a twelve-gradient room-temperature shim system, and a NIC-820 computer system (Nicolet Instrument Corporation, Madison, Wis.) which consists of 20,480 words of 20-bit core memory of which 16,384 words are used for data memory and 4096 words are used for program memory. The computer is interfaced to a Diablo Model 31 disc (Diablo Systems, Inc., Hayward, Calif.), using a Nicolet NIC-294 disc controller.

A double-conversion superheterodyne design was chosen, with audiodetection achieved at a 30-MHz intermediate frequency. The transmitter uses a heterodyne gating and NMR frequency synthesis scheme; Fig. 1. A 30-V peak-to-peak signal (into 50 ohms) obtained from the driver amplifier is amplified to about 70 W using a tuned Millen Model 90811 power amplifier (James Millen Mfg. Co., Malden, Mass.). Preamplification is achieved using two preamplifiers: the first is an FET preamplifier having 20-db gain, 5-MHz bandwidth, 37.7-MHz center frequency, and about a 1.5-db noise figure (Janel Laboratories, Corvallis, Oreg.), and the second is a high-gain wideband module (5 to 200-MHz, 2.5-db-noise figure, Model WJ-6200-12; Watkins–Johnson Co., Palo Alto, Calif.). Following preamplification, down conversion is carried out by mixing the NMR frequency ν_0 MHz with $(\nu_0 + 30)$ MHz. The upper sideband is rejected by a 30-MHz bandpass filter, and the intermediate frequency is further amplified by a variable-gain linear-amplifier model ET-3002-RFI (RHG Electronics Laboratory, Deer Park, N.Y.). Dual phase-sensitive detection is achieved at 30 MHz using a phase-comparator (Merrimac Industries, Inc., West Caldwell, N. J.). Butterworth filters (Datel Systems, Inc., Canton, Mass.) are used for signal conditioning.

Of paramount importance, of course, is the construction of our sideways-spinning probe. The basic design dimensions are as shown in Fig. 2. The spinner assembly consists of left- and right-hand stator assemblies, which provide air bearings, together with a connecting coil support. Rotors are attached to each end of a 20-mm tube using rubber O-ring seals. All spinner components are machined from Delrin; the rotor air bearing surface is finished by hand using fine emery paper.

Our NMR coil consists of five turns of 0.005-in.-thick 4-mm-diameter copper ribbon, which is epoxied to the inside of the stator coil support. Placement of this coil is facilitated by first attaching the coil to a cylindrical 0.003-in-thick Mylar former. With

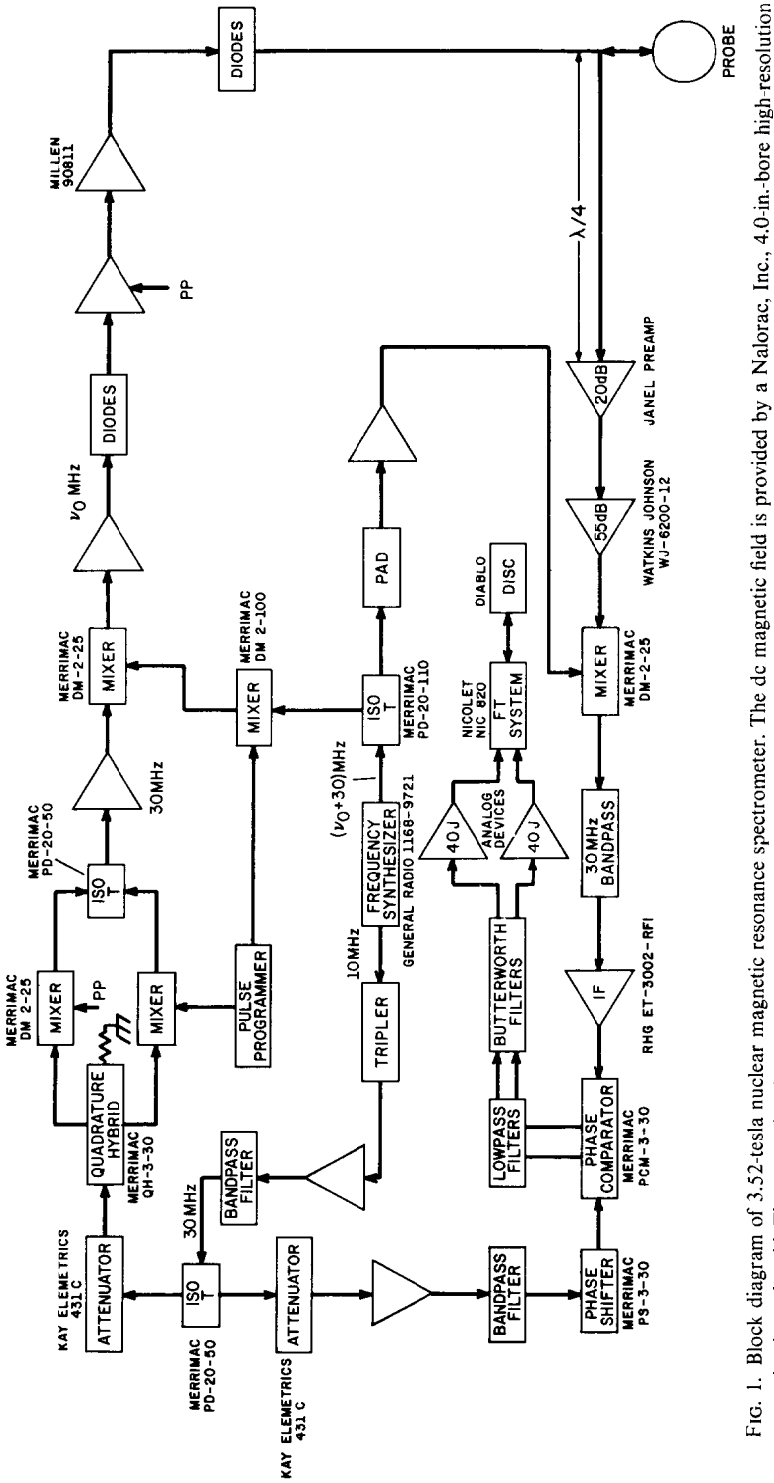

FIG. 1. Block diagram of 3.52-tesla nuclear magnetic resonance spectrometer. The dc magnetic field is provided by a Nalorac, Inc., 4.0-in.-bore high-resolution superconducting solenoid. The open triangles are low-level home-built narrow-band radiofrequency amplifiers.

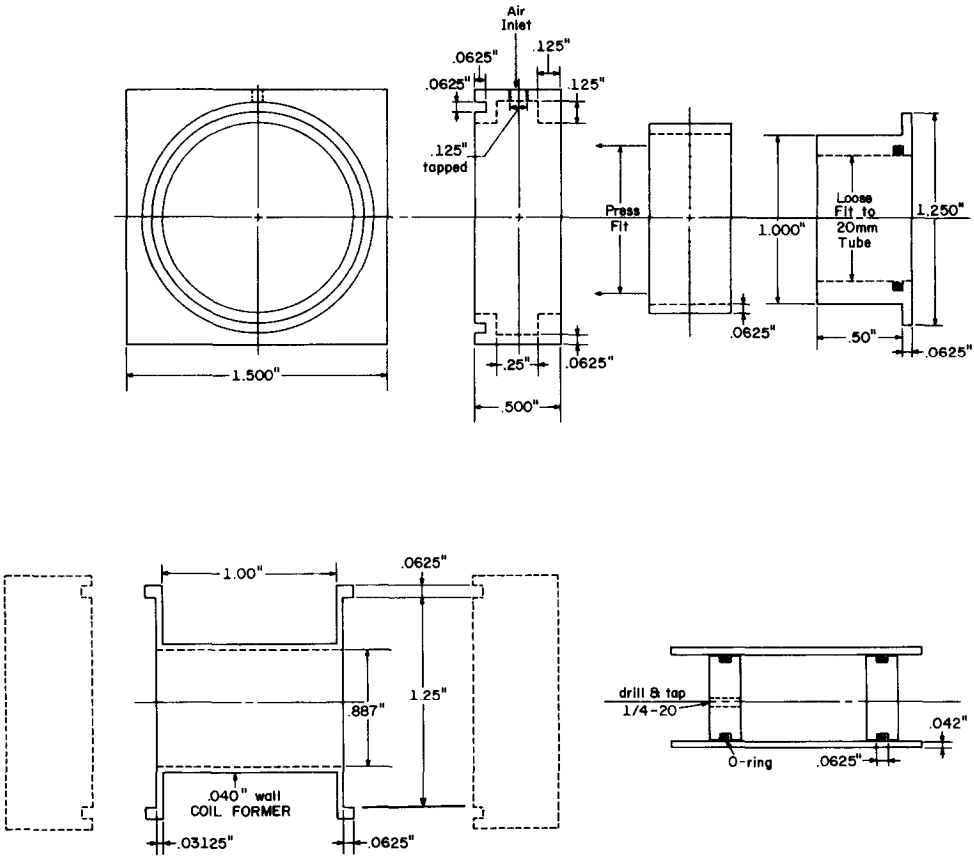

FIG. 2. Drawing of sideways-spinning 20-mm-tube probe spinner assembly. See text for other details on probe construction.

care, the Mylar former can be removed after final probe assembly, to optimize the filling factor.

The proton-decoupling coil consists of a number 20 gauge enameled copper wire Helmholtz pair wound on the outside of the coil support. Please note that our 20-mm rotors do not have any flutes. We have found that flutes are unnecessary when spinning 20-mm tubes, even at rates up to about 500 Hz. The 20-mm tubes we use in our sideways-spinning probe are obtained from Wilmad 20-mm NMR tubes (three sideways-spinning tubes may be cut from one $7\frac{1}{2}$-in. Wilmad 20-mm tube; Wilmad Glass Co., Buena, N. J.). Our SST probe normally operates at a 70-Hz spinning frequency. "Vortex" plugs are made from Teflon and have rubber O-ring seals. A $\frac{1}{4}$-20 nylon screw with O-ring seal is used to facilitate complete filling of the NMR tube. Fortunately, and contrary to our expectations, we have not experienced shimming difficulties with incompletely filled tubes—"bubbles" during spinning are converted to a narrow "tube" along the spinning axis, and this arrangement does not appear to affect our magnet shim settings appreciably.

Other components of our 20-mm SST probe are few. We use nonmagnetic air-variable beryllium–copper piston capacitors for ^{1}H and ^{13}C tuning and impedance matching (Type 7585; Johanson Mfg. Co., Boonton, N.J.). All capacitors are mounted immediately above the spinner; electrical adjustments are made from outside the probe by means of Plexiglas rods having titanium screwdriver tips. The capacitors are mounted on suitably machined single-sided copper-clad epoxy-board. Support rings for the main probe body are machined from Delrin or aluminum. The probe body is $2\frac{7}{8}$-in.-o.d., 0.083-in. wall-type E6063-T6 aluminum tube (Tube Sales, Berkeley, Illinois). Semirigid "Coppersol" copper–Teflon coaxial cable (Times Wire and Cable, Wallingford, Conn.) is used to provide electrical contact with the spectrometer, and for mechanical strength.

Our proton-decoupling circuitry is very straightforward and consists of a binary pseudorandom noise source which phase-modulates a 150-MHz proton rf carrier; this noise-modulated signal is then amplified using a 1-W broadband amplifier (Model A201; RF Power Labs, Kirkland, Wash.) which is then used to drive a 2-m 100-W amplifier, designed for radio amateur use (Tempo Model 130A02; Henry Radio, Los Angeles, Calif.). We routinely use between 1- and 10-W proton decoupling for ^{13}C NMR solution studies, by appropriate attenuation and probe mismatching, although approximately 100 W of power are available for "high-power" experiments.

Carbon forward and reflected probe power levels are continuously monitored by means of a Narda dual coaxial reflectometer coupler (Model 3020A; Narda Microwave Corp., Plainview, N.Y.). Proton-decoupling power is monitored using an in-line direct-reading watt meter (Model 43; Bird Electric Corp., Cleveland, Ohio). To prevent noise from the decoupler from entering the receiver line, we use heavy filtering on the output of the ^{1}H transmitter. As an initial effective remedy we are using a home-built 150-MHz stripline filter together with several 150-MHz shorted quarter-wave stubs. Proton rf is prevented from entering the receiver system by attaching a 100-MHz low-pass elliptical function filter (Model LL-100; Wavecom, Northridge, Calif.) which has about a 65-db rejection for 150-MHz and 0.3-db attenuation for 37.7 MHz, on the input to the ^{13}C line on the probe. Finally, we use several pairs of crossed 1N 914 diodes, in series, on the output of our Millen transmitter, to remove all adventitious sources of ^{13}C noise entering the receiver system.

The initial setup of the 20-mm-SST probe spectrometer is as follows. First, the transmitter is tuned and matched to a 50-ohm resistive termination (Cantenna Dummy Load; Heath Co., Benton Harbor, Mich.), by observing the outputs of the bidirectional coupler on an oscilloscope. Next, the probe is tuned and matched to 50 ohms using a four-port, inductive bridge (Reflexion bridge; Bruker Instruments, Manning Park, Billerica, Mass.). The single-frequency proton-decoupled carbon-13 free-induction decay of ethylene glycol is then observed using $\sim 30°$ pulse excitation and an equilibrium recycle time, and the preamp is tuned and noise-matched. A 90° pulse is then set and the magnet is shimmed, using single-frequency proton-decoupling conditions. We typically obtain a 20 to 22-μsec 90° pulse width when using 70 W of ^{13}C rf power. This low power level is quite adequate for most ^{13}C NMR investigations since we pulse in the center of the spectrum when using quadrature phase detection (*5*, *6*). Since we do not use an internal lock signal to shim our probe, the ethylene glycol shim-coil settings are used for all samples.

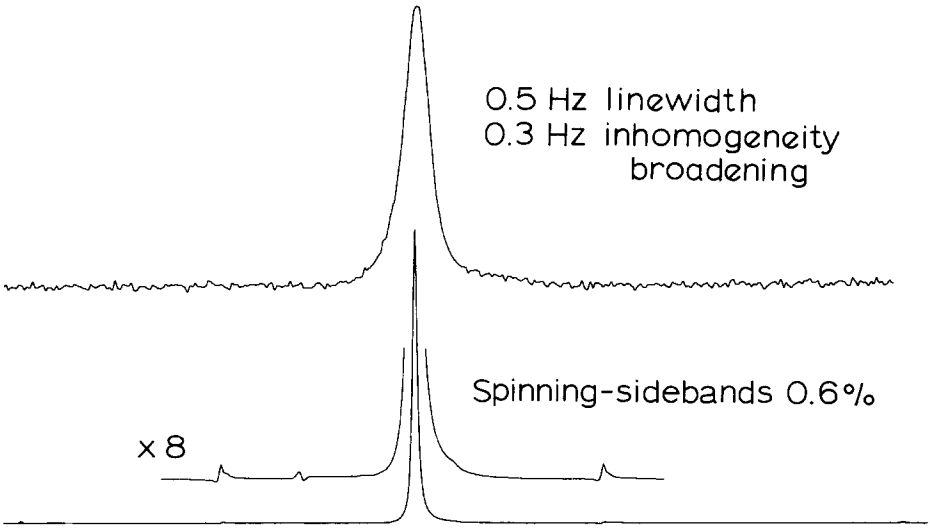

FIG. 3. Lineshape and spinning-sideband performance of the sideways-spinning 20-mm-tube probe. (A) Ethylene glycol spectrum obtained using the Fourier transform method (at 35°, ^{13}C frequency 37.722157 MHz, ^{1}H frequency 150.009407 MHz, single-frequency decoupling, 5.8-W decoupling power, 21-sec recycle time, 22-μsec pulse width, 100-Hz spectral width, zero acquisition delay time, 2 × 2048 data points, one-scan, 1000-Hz four-pole Butterworth low-pass filters, 12-bit A/D resolution, no line broadening). The sample volume was 6.5 ml and the spinning rate about 70 revolutions per second. An inhomogeneity broadening of about 0.3 Hz is inferred. (B) As above, except 128 scans, 1000-Hz spectral widths, 1.5-Hz line broadening. Spinning sidebands are about 0.6% of main peak intensity.

The resolution and sensitivity of our 20-mm SST probe are of some interest. In Fig. 3 we show a typical carbon-13 lineshape obtained for ethylene glycol. The observed linewidth is about 0.50 Hz, of which about 0.20 Hz is natural linewidth: an

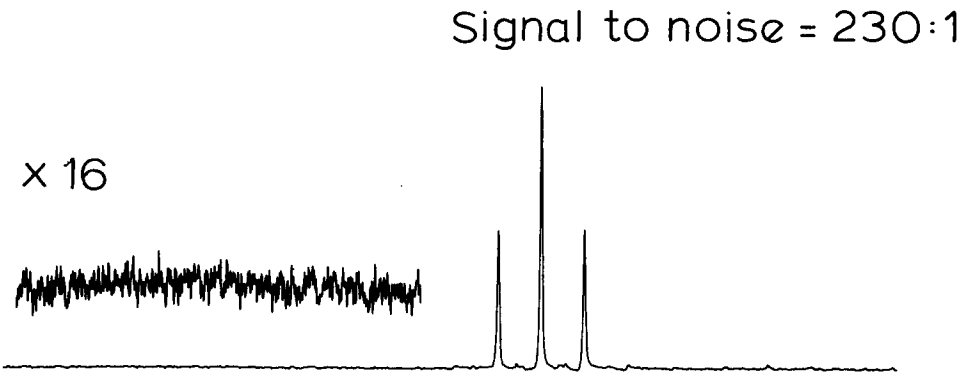

FIG. 4. Sensitivity test on dioxane using a sideways-spinning 20-mm-tube probe. Spectrum of neat dioxane was obtained using the Fourier transform method (at 35°, ^{13}C frequency 37.723347 MHz, coupled spectrum, 90° pulse excitation, 5000-Hz spectral width, 350-μsec acquisition delay time, 2 × 8192 data points, one-scan, 3000-Hz, four-pole Butterworth low-pass filters, 12-bit A/D resolution, 1.5-Hz line broadening). The insert has been plotted using 16 times the vertical gain of the main spectrum. The root-mean-square signal-to-noise ratio is about 230 : 1. The sample volume is only 6.5 ml.

inhomogeneity broadening of about 0.3 Hz is thus obtained, routinely. We would like to point out that this linewidth was obtained with only minimal effort. We feel sure that it could be improved significantly with increased effort, although since protein linewidths are typically >2 to 3 Hz, this would appear to be unnecessary for our purposes. It is of interest to note that our most important shimming gradients of the twelve supplied by the manufacturer are X, Y, $X^2 - Y^2$, XY, and to a lesser extent Z and Y^3. Changes in field homogeneity introduced by, for example, small changes in positioning of the

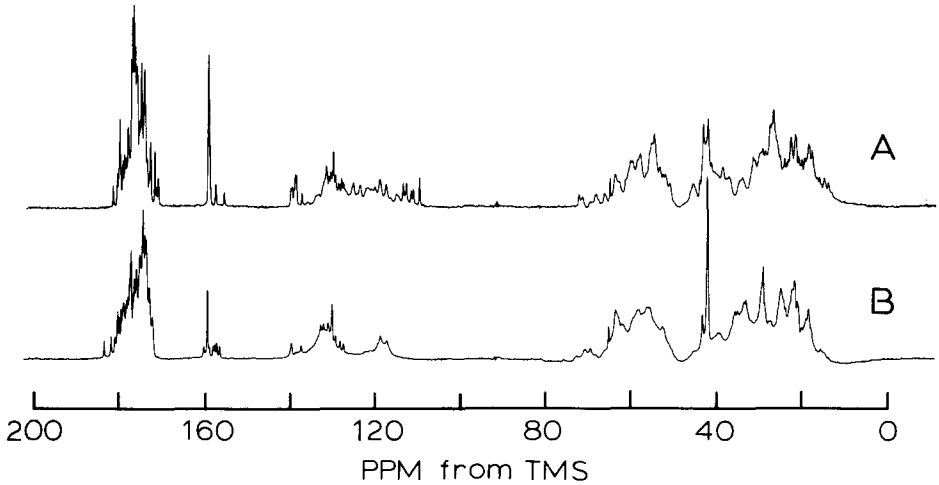

FIG. 5. Proton-decoupled natural-abundance carbon-13 Fourier transform NMR spectra of 6.5-ml aqueous solutions of (A) hen egg white lysozyme (EC 3.2.1.17) and (B) bovine pancreatic ribonuclease A (EC 2.7.7.16) obtained using a sideways-spinning 20-mm-tube probe. (A) Hen egg white lysozyme (Sigma Chemical Co., St. Louis, Mo., Type I), further purified by chromatography on diethylaminoethyl-Sephadex) in H_2O (19 mM, pH 3.3_5, about 35°, ^{13}C frequency 37.723147 MHz, ^1H frequency 150.009407 MHz, pseudorandom-noise phase-modulation, 1369-Hz bandwidth, 4.4-W decoupling power, 3.0-sec recycle time, 22-μsec pulse width, 8547-Hz spectral width, 350-μsec acquisition delay time, 2 × 8192 data points, 15,216 scans, 5000-Hz four-pole Butterworth low-pass filters, 8-bit A/D resolution, 1.5-Hz line broadening). (B) Bovine pancreatic ribonuclease A (Sigma Chemical Co., St. Louis, Missouri, Type IIA) in H_2O (17 mM, pH 4.3_8, about 35°, ^{13}C frequency 37.723147 MHz, ^1H frequency 150.009407 MHz, pseudorandom-noise phase-modulation, 1370-Hz bandwidth, 4.4-W decoupling power, 3.0-sec recycle time, 22-μsec pulse width, 8547-Hz spectral width, 350-μsec acquisition delay time, 2 × 8192 data points, 23,554 scans, 5000-Hz four-pole Butterworth low-pass filters, 6-bit A/D resolution, 1.5-Hz line broadening). No attempt was made to find the optimum recycle time/flip angle combination for these spectra.

sample tube plugs are generally corrected for by use of the above four (X, Y) gradients. Spinning sidebands in the 20-mm SST probe are typically 0.5 to 1%, as shown in Fig. 3, and we have made no attempt to reduce them below this level.

The signal-to-noise ratios obtainable with our instrument are also of some interest. In Fig. 4 we show the results of a single 90° pulse test on a 6.5-ml sample of neat dioxane, obtained using quadrature phase detection and utilizing a 1.5-Hz line broadening. We obtain a root-mean-square signal-to-noise ratio of about 230 : 1, which is comparable to that obtained by commercial systems operating in the 3.5 to 4.2-tesla field range, but which use up to twice our sample volume. Our spectrometer, however, was designed

principally for use in investigating the ^{13}C NMR of single carbon atom sites in proteins, and thus it is most appropriate that we give some examples of results we have recently obtained on these systems. In Fig. 5 we show spectra of the proteins lysozyme (EC 3.2.1.17) and ribonuclease A (EC 2.7.7.16) obtained under proton-decoupling conditions. Excellent signal-to-noise ratios are obtained on the numerous resolved single carbon atom sites. The lysozyme system has been extensively studied previously (*1*, *2*) but only one preliminary report of part of the carbon-13 spectrum of ribonuclease under

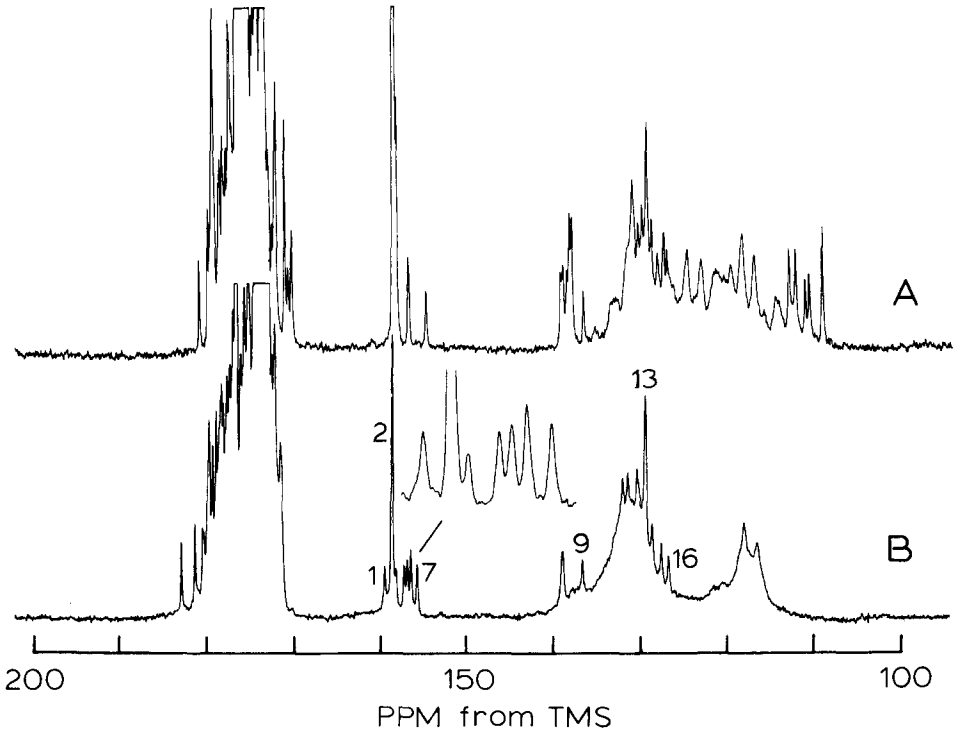

FIG. 6. Aromatic, carbonyl and C^{ζ} of arginine region of the proton-decoupled natural-abundance carbon-13 Fourier transform NMR spectra of 6.5-ml aqueous solutions of (A) hen-egg-white lysozyme and (B) bovine pancreatic ribonuclease. (A) Hen-egg-white lysozyme; horizontal and vertical expansion of the downfield region of the spectrum shown in Fig. 5A. Bovine pancreatic ribonuclease; horizontal and vertical expansion of the downfield region of the spectrum shown in Fig. 5B. The insert in (B) was obtained by means of the convolution-difference procedure (Ref. (*8*)).

reasonably high signal-to-noise-ratio conditions has been published (*7*). In Fig. 6 we present expansions of the nonprotonated carbon regions of the spectra shown in Fig. 5, which more clearly illustrate the signal-to-noise ratios achieved with our new probe. Further discussion of the ribonuclease assignments will be presented elsewhere.

Our sideways-spinning 20-mm probe has been operating for several months without any problems. We have not yet optimized the coil parameters (foil or wire type, number of turns, temperature) so we are very optimistic that the results presented here will be improved upon in the near future.

ACKNOWLEDGMENT

We thank Dr. James Carolan for his valuable suggestions and comments.

REFERENCES

1. A. ALLERHAND, R. F., CHILDERS, AND E. OLDFIELD, *Biochemistry* **12,** 1335 (1973).
2. E. OLDFIELD, R. S. NORTON, AND A. ALLERHAND, *J. Biol. Chem.* **250,** 6368 (1975); **250,** 6381.
3. A. ABRAGAM, "The Principles of Nuclear Magnetism," Oxford Univ. Press (Clarendon), London, 1961.
4. D. I. HOULT AND R. E. RICHARDS, *J. Magn. Reson* **24,** 71 (1976).
5. J. D. ELLETT, JR., M. G. GIGGY, U. HAEBERLEN, L. M. HUBER, M. MEHRING, A. PINES, AND J. S. WAUGH, in "Advances in Magnetic Resonance" (J. S. Waugh, Ed.), Vol. 5, p. 117, Academic Press, New York/London, 1971.
6. A. G. REDFIELD AND R. K. GUPTA, *in* "Advances in Magnetic Resonance" (J. S. Waugh, Ed.), Vol. 5, p. 81, Academic Press, New York/London, 1971.
7. W. EGAN, H. SHINDO, AND J. S. COHEN, *Ann. Rev. Biophys. Bioeng.* **6,** 383 (1977).
8. I. D. CAMPBELL, C. M. DOBSON, R. J. P. WILLIAMS, AND A. V. XAVIER, *J. Magn. Reson.* **11,** 172 (1973).

ERIC OLDFIELD
MICHAEL MEADOWS†

School of Chemical Sciences
University of Illinois at Urbana–Champaign
Urbana, Illinois 61801

Received December 20, 1977

† Supported by a U.S. National Institutes of Health, Cell and Molecular Biology Training Grant (Grant GM-07283).